Complete
Power Transmission
Solutions

JAW COUPLING

NYLON COUPLING

HRC COUPLING

MAKE IN INDIA

Since its inception in 1952, MSB Power Transmission has been synonymous with Mechanical Power Transmission Products. MSB Power Transmission is a leading manufacturer and a Global supplier of Power Transmission Products.

The Company has evolved over time to include an exhaustive range of products in the Power Transmission Industry.

With commitment to quality and relentless service, MSB Power Transmission has established itself as one of the global leaders in the market for power transmission products.

Our product knowledge and expertise has been critical in our growth and has helped us in our ability to metamorphosize with growing trends and products in the industry.

With a rich experience and industry specialisation, we have become pioneers in providing customised solutions to our clients.

Our extensive product manufacturing knowledge and our pursuit of synergies are the keys to providing the highest standards to our customers.

Our products stand for quality, performance, reliability, efficiency and economy ensuring that our customers are sent products conforming to the highest standards in the industry.

Product Range

Taper Lock Pulley

Timing Pulley

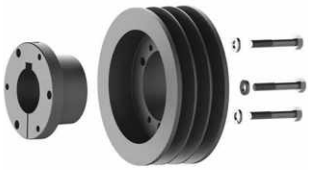

QD Pulley

Taper Grid Coupling

Gear Coupling

Pin Bush Coupling

Sprocket

Tyre Coupling

Jaw Coupling

HRC Coupling

Resilient Coupling

Nylon Coupling

Jaw Coupling

With its unique wrap around Nitrile rubber connecting element, the Snap Wrap coupling eliminates the need for dismantling the connected equipment while inspecting or replacing the element - a major benefit when down-time on machinery can run into huge amounts.

Combined with a range of prebored hubs, a modular hub design and a spacer option, the Snap Wrap coupling is unsurpassed for quality, flexibility, speed of installation and maintenance.

6 ways the "Snap Wrap" coupling can help pay for itself:

1. Prebored hubs	Hubs bored and keyed to standard IEC motor shaft sizes.
2. Snap Wrap element	Ease of inspection and replacement within 5 minutes.
3. Modular hub design	Both Models, SW & RRS use the same hubs.
4. Spacer coupling	RRS spacer model is available for pump applications.
5. Fully machined hubs	Balance, ease of alignment and smooth contact surface for elements are assured.
6. Any environment	Water, oil, greases & dust do not affect performance.

SELECTION PROCEDURE

(a) Service Factor

Determine appropriate SERVICE FACTOR from table A.

(b) Design Power

Convert application rating at 100 rpm by multiplying service factor. This gives DESIGN POWER which is used as a base for coupling selection.

(c) Coupling Size

Refer respective table for your required coupling type and read from the appropriate speed column until a power equal to or greater than the DESIGN POWER is found.

(d) Bore Size

Refer respective coupling 'TECHNICAL DATA' table to check that the required bores can be accommodated.

EXAMPLE

A coupling is required to transmit 65 kW from an electric motor which runs at 1500 rpm to a centrifugal pump for 12 hours a day. The motor shaft diameter is 60 mm. and the pump shaft diameter is 55 mm.

(a) Service Factor

From Table A the service factor is 1.0

(b) Design Power

Design Power

$$@100rpm = \frac{100}{1500} \times 65kW \times 1(SF) = 4.3\ kW$$

(c) Coupling Size

Refer Table. The first power to exceed Design Power of 4.3kW is 5.6kW. The size of coupling specified in the first column corresponding to 5.6kW is SW - 276.

(d) Bore Size

Max. Bore for coupling size SW-276 is 75 mm. This shows that both the shaft diameters are within the range.

A : SERVICE FACTORS

SPECIAL CLASSES For applications where substantial shock, vibration and torque fluctuations occur and for reciprocating machines e.g. internal combustion engines, piston pumps and compressors, refer to Rathi Transpower with full machine details	**Type of Driving Unit**					
	Electric Motors			**Internal Combustion Engines Steam Engines Water Turbines**		
	Hours per day duty			**Hours per day duty**		
Driven Machine Class	8 and under	over 8 to 16 inclusive	over 16	8 and under	over 8 to 16 inclusive	over 16
UNIFORM Agitators, Brewing machinery, Centrifugal Blowers, Conveyors, Centrifugal Fans and Pumps, Generators, Sewage disposal Equipments.Evaporators, Feeders, Textile machines, Wood working machines.	1.00	1.00	1.00	1.00	1.10	1.10
MODERATE SHOCK* Clay working machinery, Crane Hoists, Laundry machinery, Machine Tools, Rotary Mills, Paper Mill machinery, Non-uniformly loaded centrifugal pumps, Rotary Screens, Centrifugal Compressors.Shredders, Printing presses, Oil industry, Mixers, Food industry, Beaters, Bucket elevators, Gear pumps, Wood working machinery, Textile machinery	1.10	1.10	1.20	1.20	1.25	1.25
HEAVY SHOCK* Reciprocating Conveyors, Crushers, Shakers, Metal Mills, Rubber machinery (Banbury Mixers and Mills) Reciprocating Compressors, Welding Sets, Freight & passenger elevators, Cooling tower fans, Hammer mills, Reciprocating pumps, Vibrating screens, Winches, Wire drawing machines.	1.25	1.40	1.60	1.60	1.80	2.00

* It is recommended that keys with top clearance are fitted for applications where load fluctuation is expected.

MISALIGNMENT CAPABILITY

PARALLEL 0.4 mm

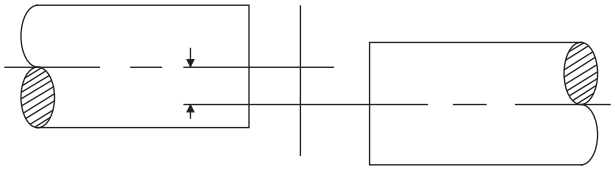

ANGULAR - 1°

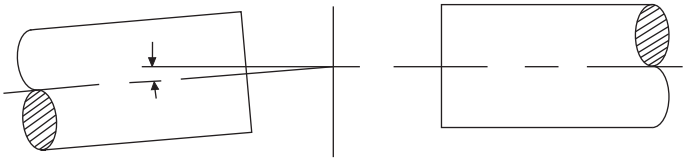

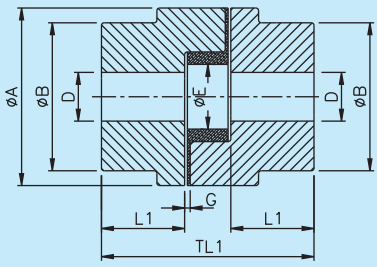

TYPE L

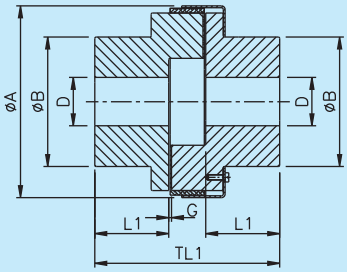

TYPE SW

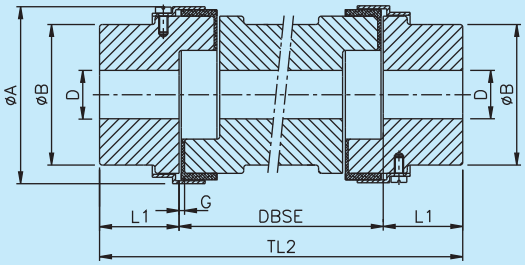

TYPE RRS

TECHNICAL DATA

Coupling		Power Rating						Pilot Drill Size	Max. Bore D	ØA		ØB	ØE	Gap G	Length thru' Bore L1	DBSE	# Overall Length TL1
		Synthetic Rubber		Polyurethane		HTrans											
Type	Size	Rated Torque (Nm)	kW@ 100 rpm	Rated Torque (Nm)	kW@ 100 rpm	Rated Torque (Nm)	kW@ 100 rpm			L	SW/ RRS						
L	35	0.38	0.004	-	-	-	-	-	10	16	-	16	-	1	6.5	-	21
	50	2.80	0.03	4.2	0.04	7.0	0.07	-	16	27	-	27	-	1	15	-	42
	70	4.90	0.05	7.4	0.08	12.3	0.13	-	20	35	-	35	-	2	19	-	51
	● 75	9.80	0.1	14.7	0.15	24.5	0.26	-	22	45	-	45	-	2	21	-	55
	■ 75	9.80	0.1	14.7	0.15	24.5	0.26	-	22	45	-	39	-	2	21	-	55
L SW RRS	95	21.10	0.22	31.7	0.33	52.8	0.55	-	28	54	65	49	19	2	25	90,100,140	63
	► 99	46.40	0.49	69.6	0.73	116	1.2	-	30	65	78	51	27	2	27		72
	100	46.40	0.49	69.6	0.73	116	1.2	-	35	65	78	57	27	2	35		88
	110	89	0.93	133.5	1.4	222.5	2.3	-	42	85	96	76	35	3	43	90	108
	150	141	1.5	211.5	2.2	352.5	3.7	-	48	96	111	80	35	3	45	100	115
	190	190	2.0	285	3.0	475	5.0	-	60	115	129	102	45	3	54	140	133
	225	265	2.8	397.5	4.2	662.5	6.9	-	65	127	142	111	45	3	64	180	153
	226	327	3.4	490.5	5.1	817.5	8.6	25	70	137	153	119	51	3	70		178
L SW	276	532	5.6	798	8.4	1330	13.9	25	75	157	173	127	60	3	80	-	200
	280	782	8.2	1173	12.3	1955	20.5	30	80	192	208	140	70	3	80	-	200
	295	1279	13.4	1918.5	20.1	3197.5	33.5	30	95	237	253	162	80	3	95	-	238
	2955	2132	22.3	* 3198	* 33.5	* 5330	* 55.8	30	105	237	253	180	80	3	108	-	264
SW	300	3047	31.9	4570.5	47.9	7617.5	79.8	30	105	-	272	180	-	3	115	-	283
	350	4308	45.1	6462	67.7	10770	112.8	30	115	-	323	200	-	3	128	-	309

All dimensions are in mm.
For RRS/SW maintain gap 'G' at the time of assembly.
FOR RRS, TL2=DBSE + 2L1
For vertical installation contact RATHI.
Maximum bores can be increased in case of steel hubs. Consult manufacturer
* Only SW version available, L version not available.
► RRS 99 not available

Material : Sintered iron for sizes 035 to 075
Aluminum for sizes 050 to 110 & for all RRS spacers.
Cast Iron for sizes 095 to 350.

■ 075 – Aluminium
● 075 -- Sintered Iron

HRC COUPLINGS

HRC Couplings are essentially general purpose couplings with a flexible element which can accommodate higher degree of misalignment.

- Parallel misalignment upto 0.5 mm
- Axial misalignment upto 1.7 mm

Because of their superior design HRC Couplings can accommodate larger shafts which make them a more economical propositon.

SALIENT FEATURES

ECONOMY
The design of the HRC coupling has been optimised so that power capacities are balanced to the appropriate shaft diameters utilising Taper-Lock® Bush fixing.

RESILIENCE
Transient peak loads are reduced by a flexible component, deflection of which is a prime design consideration.

MISALIGNMENT
Incidental parallel, angular and axial displacement of the connected shafts can be accommodated.

INSTALLATION
Quick and easy without special tools, only an allen key is required.

MAINTENANCE
Virtually eliminated and no lubricant is required.

ENVIRONMENT
The elastomeric component makes HRC coupling suitable for use in most conditions within a temperature range of -40°C to + 100°C.

POSITIVE
In the unlikely event of the flexible component being destroyed, the drive will be maintained by the interaction of dogs which are integral with the flanges.

TABLE 1 - SERVICE FACTORS

SPECIAL CASES	TYPES OF DRIVING UNIT					
For applications where substantial shock, vibration and torque fluctuation occur and for reciprocating machines, e.g. internal combustion engines, piston type pumps and compressors, refer to Fenner with full machine details for torsional analysis.	Electric Motors Steam Turbines			Internal Combustion Engines Steam Engines Water Turbines		
	OPERATIONAL HOURS PER DAY					
DRIVEN MACHINE CLASS	8 and under	Over 8 to 16 inclusive	Over 16	8 and under	Over 8 to 16 inclusive	Over 16
UNIFORM Agitators, Brewing Machinery, Centrifugal Blower and Compressors, Conveyors, Centrifugal Fans and Pumps, Generators, Sewage Disposal Equipment.	1.00	1.12	1.25	1.25	1.40	1.60
MODERATE SHOCK* Clay working machinery, Cranes Hoist, Laundry machinery, Wood working machinery, Machinery Tools, Rotary Mills, Paper Mill machinery, Textile machinery.	1.60	1.80	2.00	2.00	2.24	2.50
HEAVY SHOCK* Reciprocating conveyors, Crushers, Shakers, Metal Mills, Rubber machinery, (Banbury Mixers and Mills), Reciprocating compressors.	2.50	2.80	3.12	3.12	3.55	4.00

* It is recommended that keys (with top clearance if in Taper Lock Bushes) are fitted for applications where load fluctuation is expected.

HRC Coupling

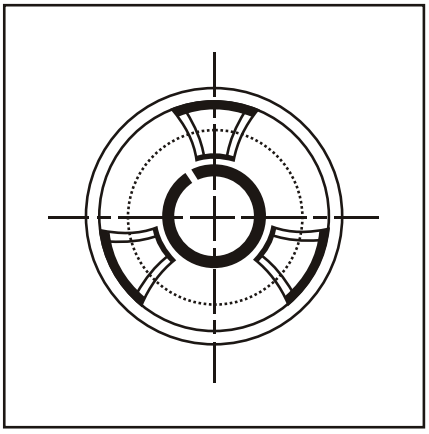

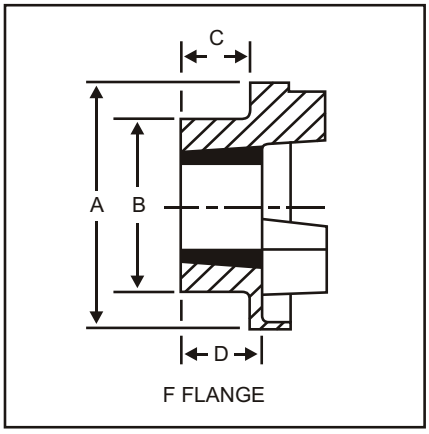

F FLANGE

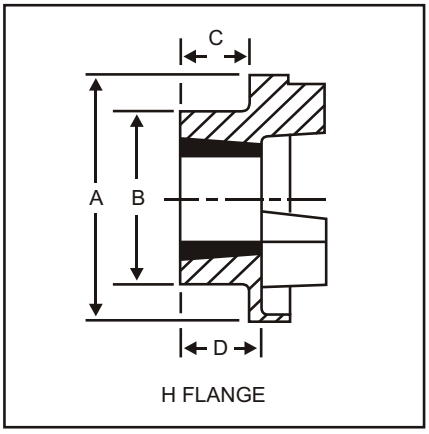

H FLANGE

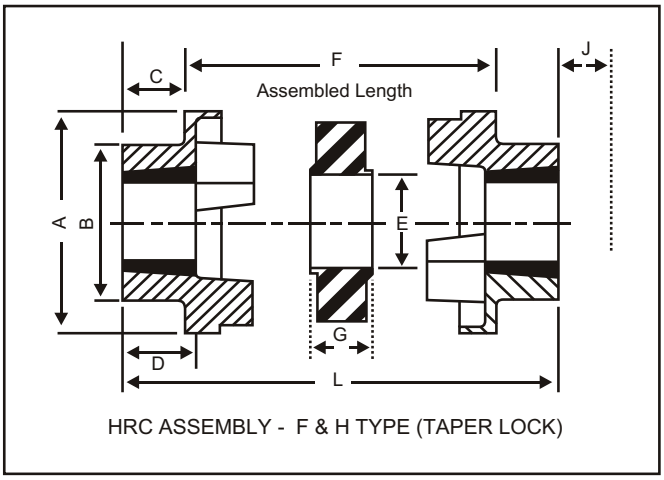

HRC ASSEMBLY - F & H TYPE (TAPER LOCK)

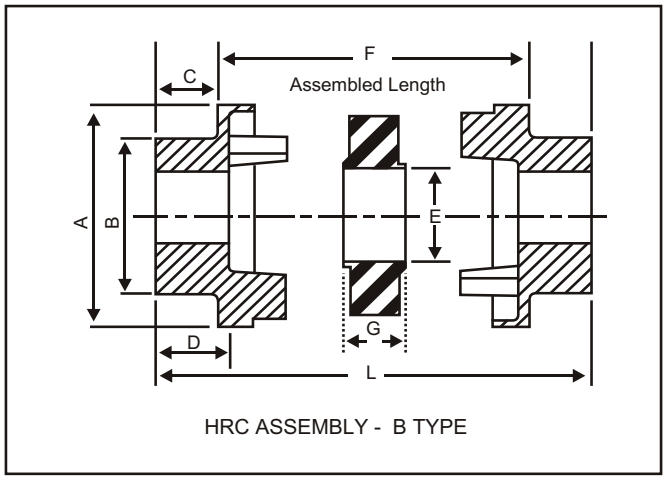

HRC ASSEMBLY - B TYPE

TABLE 2 - DIMENSIONS

Size	Power at 100 rpm kW	Type F & H								Type B						A	B	E	G
		TLB Size	Min. Bore	Max. Bore	C	D	F	L	J*	Min. Bore	Max. Bore	C	D	F	L				
70	0.33	1008	09	25	20.0	24	26.0	66.0	29	10	32	20	24	26.0	66.0	69	60	31	18.0
90	0.84	1108	09	28	19.5	24	31.5	70.5	29	10	35	26	30	30.5	82.5	85	70	32	22.5
110	1.68	1210	11	32	18.5	27	46.0	83.0	38	10	55	37	45	45.0	119.0	112	100	45	29.0
110A	1.68	1610	14	42	18.5	27	46.0	83.0	38	-	-	-	-	-	-	112	100	45	29.0
130	3.30	1610	14	42	18.0	27	54.0	90.0	38	14	60	47	56	54.0	148.0	130	105	50	36.0
150	6.28	2012	14	50	23.5	34	61.0	108.0	44	19	70	50	60	60.0	160.0	150	115	62	40.0
180	9.95	2517	16	60	34.5	47	74.0	143.0	48	35	80	58	70	73.0	189.0	180	125	77	49.0
230	20.90	3020	25	75	39.5	53	86.5	165.5	55	38	100	77	90	85.5	239.5	225	155	99	59.5
280	33.00	3525	35	90	51.0	67	106.5	208.5	67	48	115	90	105	104.5	284.5	275	206	119	74.5

* J - Wrench clearance to allow for tightening and loosening the bush on the shaft.

HRC COUPLINGS

Selection (Standard Electric Motors BS:3979 and IS : 1231)

1.Read across the table 3 from the appropr iate motor frame size and find the applicable nominal motor speed column.

2.Read the appropriate coupling selection for either Taper-Lock® 'H' or 'F'

TABLE 3 - SERVICE FACTORS NOT LESS THAN 1.6

Motor Frame Size	Shaft Dia. mm.	3000 rev/min		1500 rev/min		1000 rev/min		750 rev/min	
		Motor Power kW	Coupling Size	Motor Power kW	Coupling Size	Motor Power kW	Coupling Size	Motor Power kW	Couping Size
90 S	24	1.5	70	1.1	70	0.75	70	-	-
90L	24	2.2	70	1.5	70	1.1	70	-	-
112 M	28	4	90	4	90	2.2	90	-	-
132 S	38	5.5 7.5	110 A 110 A	5.5	110 A	3	110 A	2.2	110 A
132 M	38			7.5	110 A	4 5.5	110 A 110 A	3	110 A
160 M	42	11 15	110 A 110 A	11	110 A	7.5	110 A	4 5.5	110 A 110 A
160 L	42	18.5	110 A	15	110 A	11	130	7.5	110 A
180 M	48	22	150	18.5	150				
180 L	48			22	150	15	150	11	150
200 L	55	30	180						
37	180			22	180				
225 S	60			37	180			18.5	180
225 M	55 * 60	45	180	45	180	30	180	22	180
250 M	60 * 65	55	180	55	230	37	230	30	230
280 S	75			75	230	45	230	37	230
280 M	75			90	230	55	230	37	230
315 S	80			110	280	75	280	55	280
315 M	80			132	280	90	280	75	280

* 3000 rev/min only.

®Registered Trade Mark

a. Service Factor

Determine the required service factor from Table 1.

b. Design Power

Multiply the normal running power by the service factor. This gives the Design Power which is used as a basis for coupling selection.

c. Coupling Size

Refer to Table 4 (page 5) and from the appropriate speed in the speed column, read across until a power equal to or greater than the design power required is found.

d. Bore Size

From the dimension Table 2 check that the chosen flanges can accommodate the required bores.

Example : A shaft coupling is required to transmit 70kW between a 1440 rev/min electric motor and a hoist running over 16 hours/day. The motor shaft is 70 mm. and the hoist shaft is 75 mm.

a.Service Factor
From Table 1, the Service Factor is 2.

b.Design Power
Design Power : 70 x 2 : 140 kW

c.Coupling Size
By reading across from 1440 rev/min in the speed column of Table 4 (Power Rating Table) 143 kW is the first power to exceed the required 140 kW (design power). The size of coupling at the head of this column is 180.

d.Bore Size
By referring to the Dimension table 2 it can be seen that for HRC - 180B type both shaft diameters fall within the bore range available. However in case the coupling selection is required in F&H type then select HRC-230 F&H type.

Nylon Coupling

MSB Nylon Coupling is torsionally rigid power transmission couplings. Their flexible shaft connections transmit torque between two steel gear hubs and the internal teeth of a nylon drive sleeve. These couplings are specifically suitable to compensate for shaft misalignment, whether axial, radial, and/or angular.

Single or doubts engagement options make the Nylon Couplings suitable for variety of applications. The spacer type connections can accommodate large shaft end gaps. Nylon couplings can be assembled both vertically and horizontally. There is no need for any special assembly tools. Nylon Couplings are non lubricated and low noise.

The steel hubs and nylon sleeves are a material combination that allows for maintenance free, continuous operation and very low friction onthe teeth. In the case of misalignment in couplings between hubs with spur teeth, high edge pressure can develop on the contact surfaces. This can lead to considerable wear.

The curved teeth of the Nylon Couplings avoid edge pressure on the coupling, even in the case of angular and radial misalignment.

Service Factors

Service Factors for Operation of Drive System

Application	Service Factor
AERATOR	2.0
AGITATORS	
Vertical and Horizontal Scerw, Propeller, Paddle	1.0
BARGE HAUL PULLER	1.5
BLOWERS	
Centrifugal	1.0
Lobe or Vane	1.25
CAR DUMPERS	2.5
CAR PULLERS	1.5
CLARIFIER or CLASSIFIER	1.0
COMPRESSORS	
Centrifugal	1.0
Rotary, Lobe or Vane	1.25
Rotary, Screw	1.0
With Flywheel and Gear between Compressor and Prime Mover	
1 Cylinder, single acting	3.0
1 Cylinder, double acting	3.0
2 Cylinders, single acting	3.0
2 Cylinders, double acting	3.0
3 Cylinders, single acting	3.0
3 Cylinders, double acting	2.0
4 or more cylinders, single acting	1.75
4 or more cylinders, double acting	1.75
CONVEYORS	
Apron, Assembly, Belt, Chain, Flight, Screw	1.0
Bucket	1.25
Live Roll, Shaker and Reciprocating	3.0
CRANES and HOIST	
Main Hoist	1.75
Skip Hoist	1.75
Slope	1.5
Bridge, Travel or Trolley	1.75
DYNAMOMETER	1.0
ELEVATORS	
Bucket, Centrifugal Discharge	1.25
Gravity Discharge	1.25
EXCITER, GENERATOR	1.0
EXTRUDER, PLASTIC	1.5
FANS	
Centrifugal	1.0
Cooling Tower	2.0
Forced Draft-Acrossthe Line start	1.5
Forced Draft Motor driven thru fluid or electric slip clutch	1.0
Gas Recirculating	1.5
Induced Draft with damper control or blade cleaner	1.25
Induced Draft without controls	2.0
FEEDERS	
Apron, Belt, Disc, Screw	1.0
Reciprocating	2.5
GENERATORS	
Even Load	1.0
Hoist or Railway Service	1.5
Welder Load	2.0
GENERATORS	
Even Load	1.0

Application	Service Factor
Hoist or Railway Service	1.5
Welder Load	2.0
HAMMERMILL	1.75
LAUNDRY WASHER or TUMBLER	2.0
LINE SHAFTS	
Any Processing Machinery	1.5
MACHINE TOOLS	
Auxiliary and Traverse Drive	1.0
Bending Roll, Notching Press, Punch Press, Planer, Plate Reversing	1.75
Main Drive	1.5
METAL FORMING MACHINES	
Continous Caster	1.75
Draw Bench Carriage and Main Drive	2.0
Extruder	2.0
Farming Machine and Forming Mills	2.0
Slitters	1.0
Wire Drawing or Flattening	1.75
Wire Winder	1.5
Coilers and Uncoilers	1.5
MIXERS	
Concrete	1.75
Muller	1.5
PRESS, PRINTING	1.5
PUG MILL	1.75
PULVERIZERS	
Hammermil and Hog	1.75
Roller	1.5
PUMPS	
Boiler Feed	1.5
Centrifugal-Constant Speed	1.0
Frequent Speed Changes under Load	1.25
Descaling with accumulators	1.25
Gear, Rotary, or Vane	1.25
Reciprocating, Plunger Piston	
1 Cylinder, single or double acting	3.0
2 Cylinders, single acting	2.0
2 Cylinders, double acting	1.75
3 or more cylinders	1.5
Screw Pump, Progressing Cavity	1.25
Vacuum Pump	1.25
SCREENS	
Air Washing	1.0
Grizzly	2.0
Rotary Coal or Sand	1.5
Vibrating	2.5
Water	1.0
STEERING GEAR	1.0
STOKER	1.0
TIRE SHREDDER	1.5
TUMBLING BARREL	1.75
WINCH, MANEUVERING	
Dredge, Marine	1.5
WINDLASS	1.5
WOODWORKING MACHINERY	1.0

+91 (22) 23429666 / 23401271 / 23414890
info@msbindia.co.in | www.msbindia.co.in

Head Office:
152, Narayan Dhuru St,
Mumbai - 400003

Factory:
40, Ashwamegh Industrial estate,
Sarkhej - Bavla Highway,
Changodar - 382213